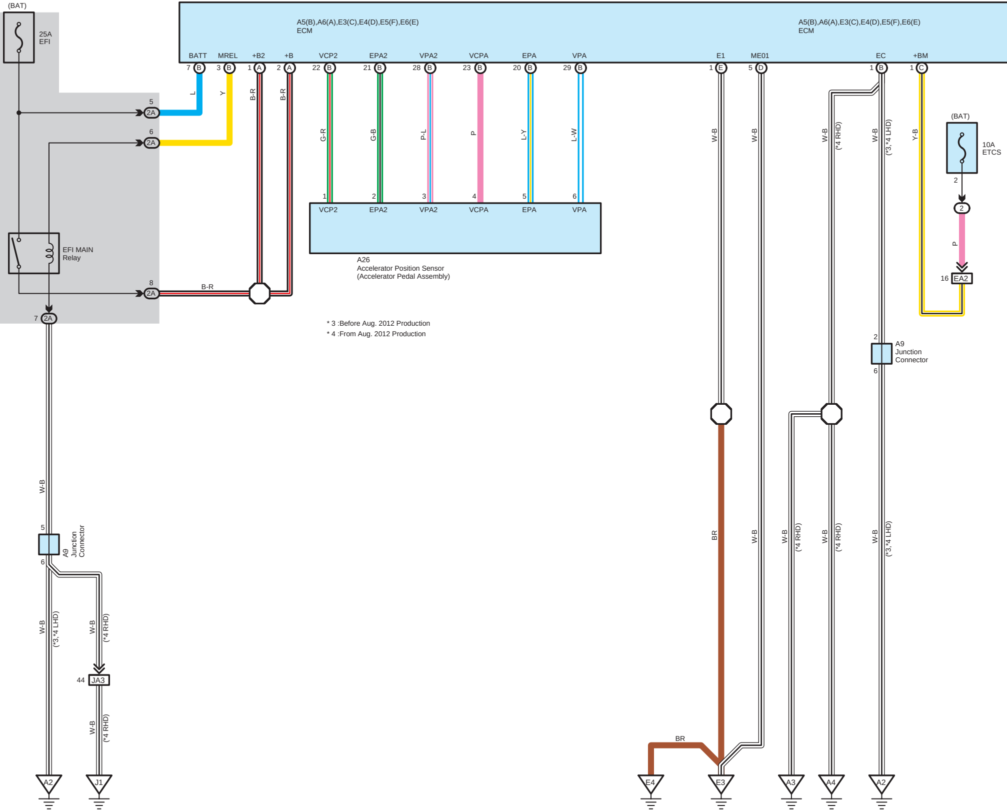
(BAT)
25A
EFI
EFI MAIN
Relay
A5(B),A6(A),E3(C),E4(D),E5(F),E6(E)
ECM
BATT
MREL
+B2
+B
VCP2
EPA2
VPA2
VCPA
EPA
VPA
E1
ME01
EC
+BM
7 B
3 B
1 A
2 A
22 B
21 B
28 B
23 B
20 B
29 B
1 E
5 D
1 B
1 C
L
Y
B-R
G-R
G-B
P-L
P
L-Y
L-W
W-B
(*4 RHD)
(*3, *4 LHD)
Y-B
5 2A
6 2A
8 2A
7 2A
B-R
A26
Accelerator Position Sensor
(Accelerator Pedal Assembly)
(BAT)
10A
ETCS
2
2
P
16 EA2
2
A9
Junction
Connector
6
5
6
44 JA3
BR
A2
J1
E4
E3
A3
A4
A2

* 3 :Before Aug. 2012 Production

* 4 :From Aug. 2012 Production

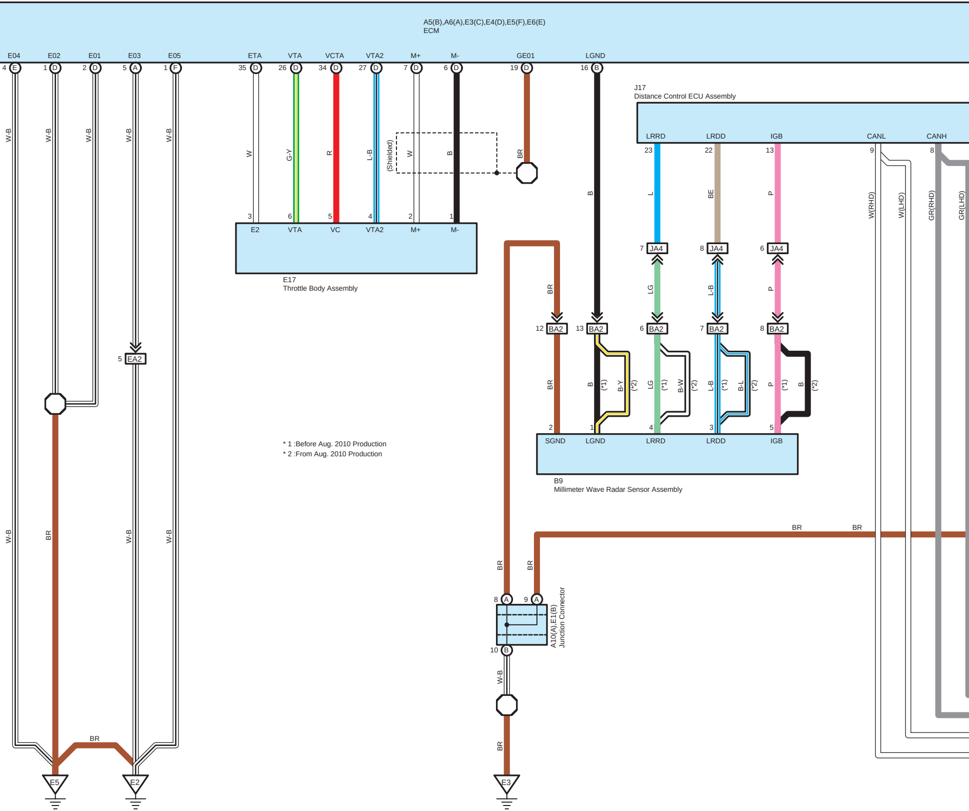
A5(B),A6(A),E3(C),E4(D),E5(F),E6(E)
ECM
E04
E02
E01
E03
E05
ETA
VTA
VCTA
VTA2
M+
M-
GE01
LGND
W-B
W
G-Y
R
L-B
(Shielded)
B
BR
3
6
5
4
2
1
E2
VTA
VC
VTA2
M+
M-
E17
Throttle Body Assembly
EA2
J17
Distance Control ECU Assembly
LRRD
LRDD
IGB
CANL
CANH
23
22
13
9
8
L
BE
P
W(RHD)
W(LHD)
GR(RHD)
GR(LHD)
JA4
LG
BA2
B-Y
B-W
B-L
(*1)
(*2)
SGND
LGND
LRRD
LRDD
IGB
B9
Millimeter Wave Radar Sensor Assembly
A10(A),E1(B)
Junction Connector
E5
E2
E3

* 1 :Before Aug. 2010 Production
* 2 :From Aug. 2010 Production

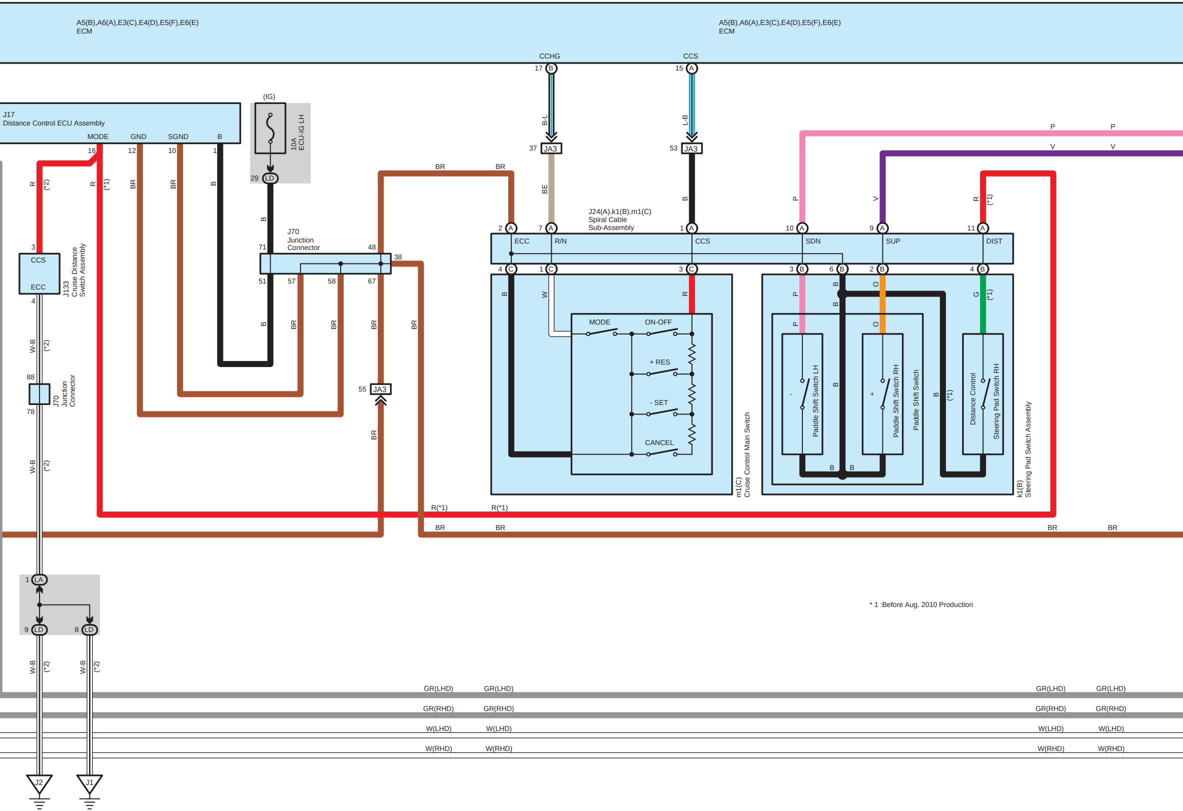
A5(B),A6(A),E3(C),E4(D),E5(F),E6(E)
ECM
A5(B),A6(A),E3(C),E4(D),E5(F),E6(E)
ECM
CCHG
CCS
17 B
15 A
B-L
L-B
37 JA3
53 JA3
J17
Distance Control ECU Assembly
MODE
GND
SGND
B
16
12
10
1
(IG)
10A
ECU-IG LH
29 LD
R (*2)
R (*1)
BR
BR
B
B
BR
BR
BE
B
J24(A),k1(B),m1(C)
Spiral Cable
Sub-Assembly
P
P
P
V
V
V
R (*1)
2 A
7 A
1 A
10 A
9 A
11 A
ECC
R/N
CCS
SDN
SUP
DIST
4 C
1 C
3 C
3 B
6 B
2 B
4 B
J70
Junction
Connector
71
48
38
51
57
58
67
3
CCS
ECC
4
J133
Cruise Distance
Switch Assembly
B
BR
BR
BR
BR
B
W
R
MODE
ON-OFF
+ RES
- SET
CANCEL
m1(C)
Cruise Control Main Switch
P
B
O
G (*1)
P
B
O
-
Paddle Shift Switch LH
B
+
Paddle Shift Switch RH
Paddle Shift Switch
B (*1)
Distance Control
Steering Pad Switch RH
k1(B)
Steering Pad Switch Assembly
B
B
W-B (*2)
88
J70
Junction
Connector
78
W-B (*2)
55 JA3
BR
R(*1)
R(*1)
BR
BR
BR
BR
1 LA
9 LD
8 LD
W-B (*2)
W-B (*2)
J2
J1
GR(LHD)
GR(LHD)
GR(LHD)
GR(LHD)
GR(RHD)
GR(RHD)
GR(RHD)
GR(RHD)
W(LHD)
W(LHD)
W(LHD)
W(LHD)
W(RHD)
W(RHD)
W(RHD)
W(RHD)

* 1 :Before Aug. 2010 Production

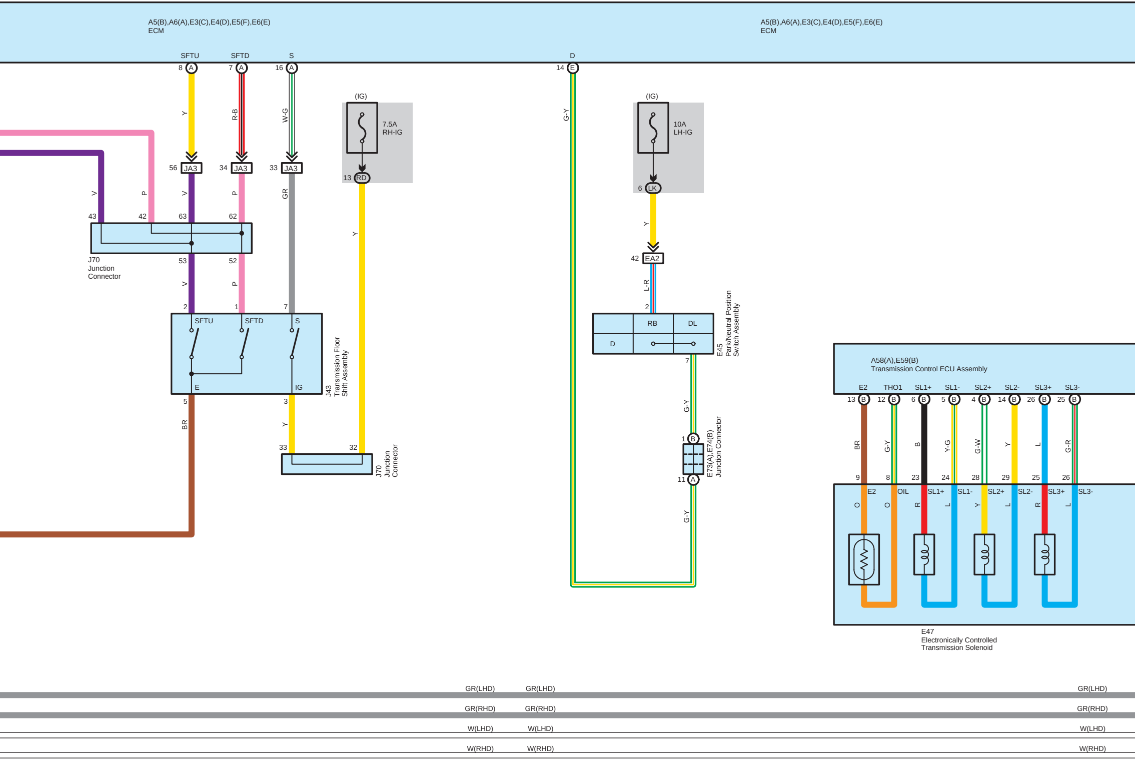
A5(B),A6(A),E3(C),E4(D),E5(F),E6(E)
ECM
SFTU
SFTD
S
8 A
7 A
16 A
Y
R-B
W-G
56 JA3
34 JA3
33 JA3
(IG)
7.5A
RH-IG
13 RD
V
P
V
P
GR
43
42
63
62
J70
Junction
Connector
53
52
V
P
2
1
7
SFTU
SFTD
S
E
IG
J43
Transmission Floor
Shift Assembly
5
BR
3
Y
33
32
J70
Junction
Connector
Y
A5(B),A6(A),E3(C),E4(D),E5(F),E6(E)
ECM
D
14 E
G-Y
(IG)
10A
LH-IG
6 LK
Y
42 EA2
L-R
2
RB
DL
D
7
E45
Park/Neutral Position
Switch Assembly
G-Y
1 B
11 A
E73(A),E74(B)
Junction Connector
G-Y
A58(A),E59(B)
Transmission Control ECU Assembly
E2
THO1
SL1+
SL1-
SL2+
SL2-
SL3+
SL3-
13 B
12 B
6 B
5 B
4 B
14 B
26 B
25 B
BR
G-Y
B
Y-G
G-W
Y
L
G-R
9
8
23
24
28
29
25
26
E2
OIL
SL1+
SL1-
SL2+
SL2-
SL3+
SL3-
O
O
R
L
Y
L
R
L
E47
Electronically Controlled
Transmission Solenoid
GR(LHD)
GR(LHD)
GR(LHD)
GR(RHD)
GR(RHD)
GR(RHD)
W(LHD)
W(LHD)
W(LHD)
W(RHD)
W(RHD)
W(RHD)

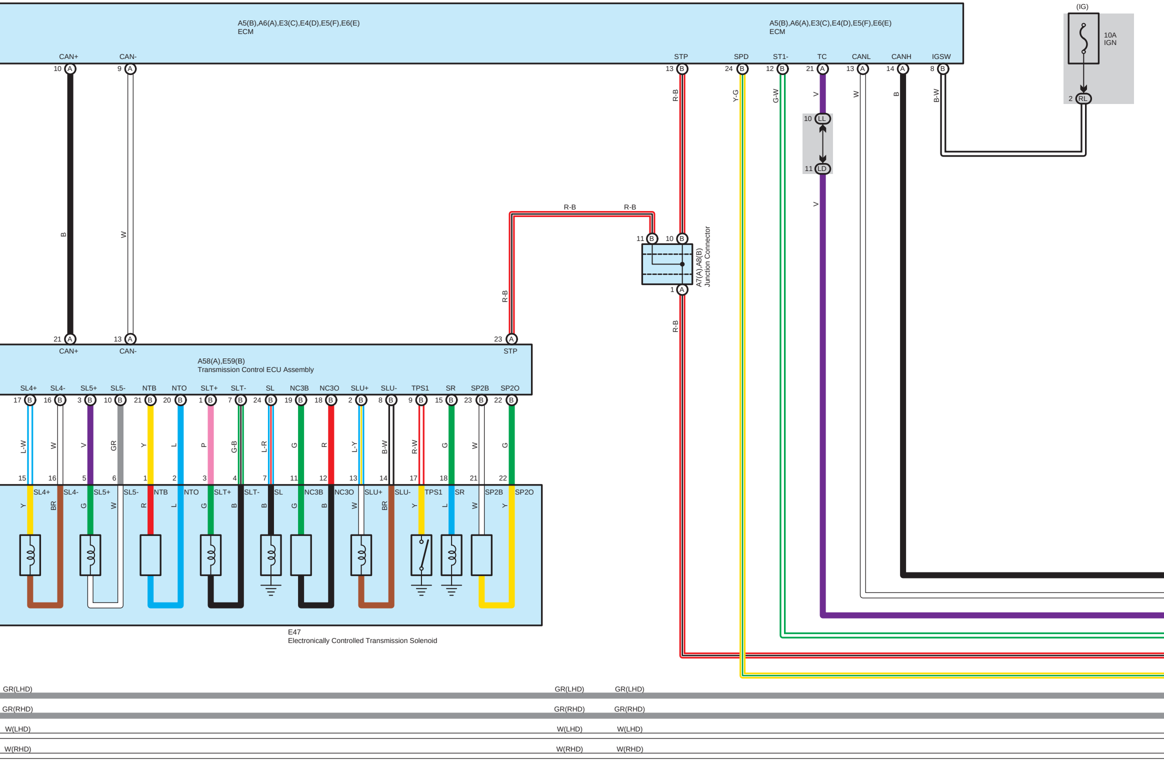
A5(B),A6(A),E3(C),E4(D),E5(F),E6(E)
ECM
CAN+
CAN-
10 A
9 A
B
W
A5(B),A6(A),E3(C),E4(D),E5(F),E6(E)
ECM
STP
SPD
ST1-
TC
CANL
CANH
IGSW
13 B
24 B
12 B
21 A
13 A
14 A
8 B
R-B
Y-G
G-W
V
W
B
B-W
(IG)
10A
IGN
2 RL
10 LL
11 LD
V
R-B
R-B
11 B
10 B
A7(A),A8(B)
Junction Connector
1 A
R-B
R-B
21 A
13 A
23 A
CAN+
CAN-
STP
A58(A),E59(B)
Transmission Control ECU Assembly
SL4+
SL4-
SL5+
SL5-
NTB
NTO
SLT+
SLT-
SL
NC3B
NC3O
SLU+
SLU-
TPS1
SR
SP2B
SP2O
17 B
16 B
3 B
10 B
21 B
20 B
1 B
7 B
24 B
19 B
18 B
2 B
8 B
9 B
15 B
23 B
22 B
L-W
W
V
GR
Y
L
P
G-B
L-R
G
R
L-Y
B-W
R-W
G
W
G
15
16
5
6
1
2
3
4
7
11
12
13
14
17
18
21
22
SL4+
SL4-
SL5+
SL5-
NTB
NTO
SLT+
SLT-
SL
NC3B
NC3O
SLU+
SLU-
TPS1
SR
SP2B
SP2O
Y
BR
G
W
R
L
G
B
B
G
B
W
BR
Y
L
W
Y
E47
Electronically Controlled Transmission Solenoid
GR(LHD)
GR(LHD)
GR(LHD)
GR(RHD)
GR(RHD)
GR(RHD)
W(LHD)
W(LHD)
W(LHD)
W(RHD)
W(RHD)
W(RHD)

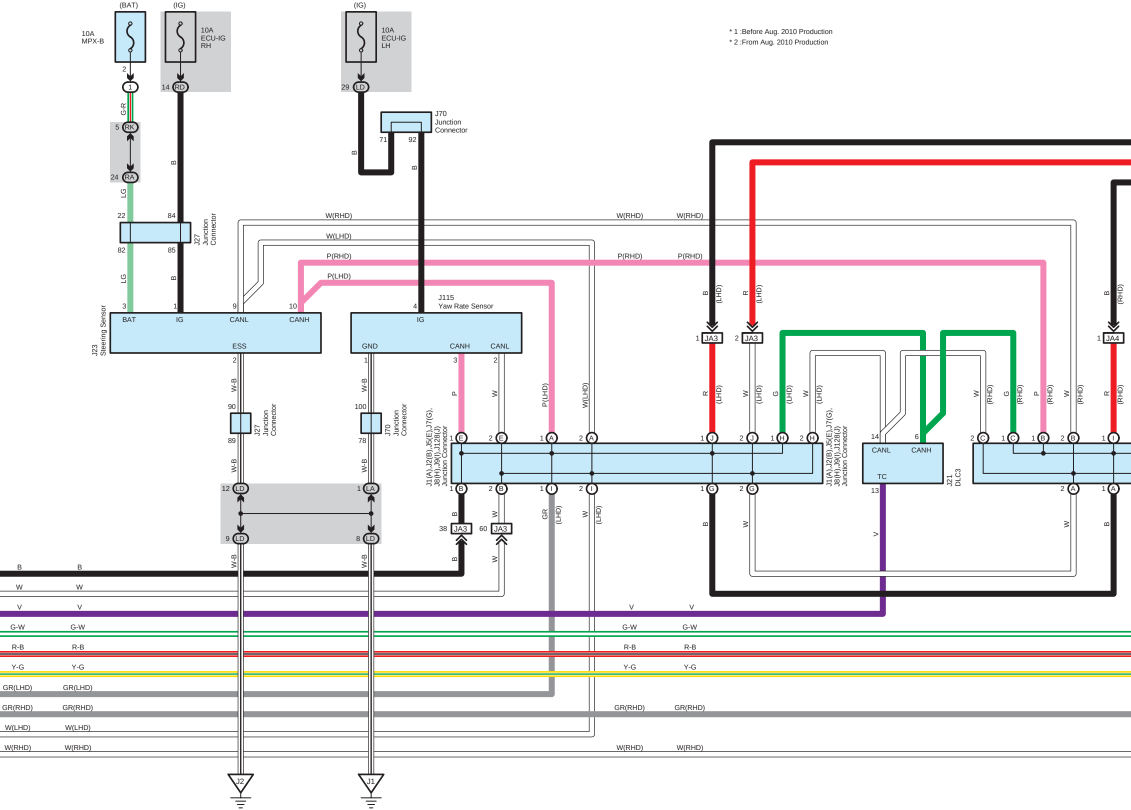
(BAT)
10A MPX-B
(IG)
10A ECU-IG RH
(IG)
10A ECU-IG LH
2
1
G-R
5 RK
24 RA
LG
14 RD
29 LD
J70 Junction Connector
71
92
B
22
84
82
85
J27 Junction Connector
W(RHD)
W(LHD)
P(RHD)
P(LHD)
J115 Yaw Rate Sensor
J23 Steering Sensor
BAT
IG
CANL
CANH
ESS
3
1
9
10
4
IG
GND
CANH
CANL
2
1
3
2
W-B
90
89
J27 Junction Connector
100
78
J70 Junction Connector
P
W
P(LHD)
W(LHD)
J1(A),J2(B),J5(E),J7(G), J8(H),J9(I),J128(J) Junction Connector
12 LD
1 LA
9 LD
8 LD
1 B
2 B
1 I
2 I
1 E
2 E
1 A
2 A
38 JA3
60 JA3
GR
(LHD)
B
W
V
G-W
R-B
Y-G
GR(LHD)
GR(RHD)
W(LHD)
W(RHD)
J2
J1
B
R
(LHD)
(RHD)
1 JA3
2 JA3
1 JA4
1 J
2 J
1 H
2 H
1 G
2 G
G
14
6
CANL
CANH
TC
13
J21 DLC3
2 C
1 C
1 B
2 B
1 I
2 A
1 A

* 1 :Before Aug. 2010 Production
* 2 :From Aug. 2010 Production

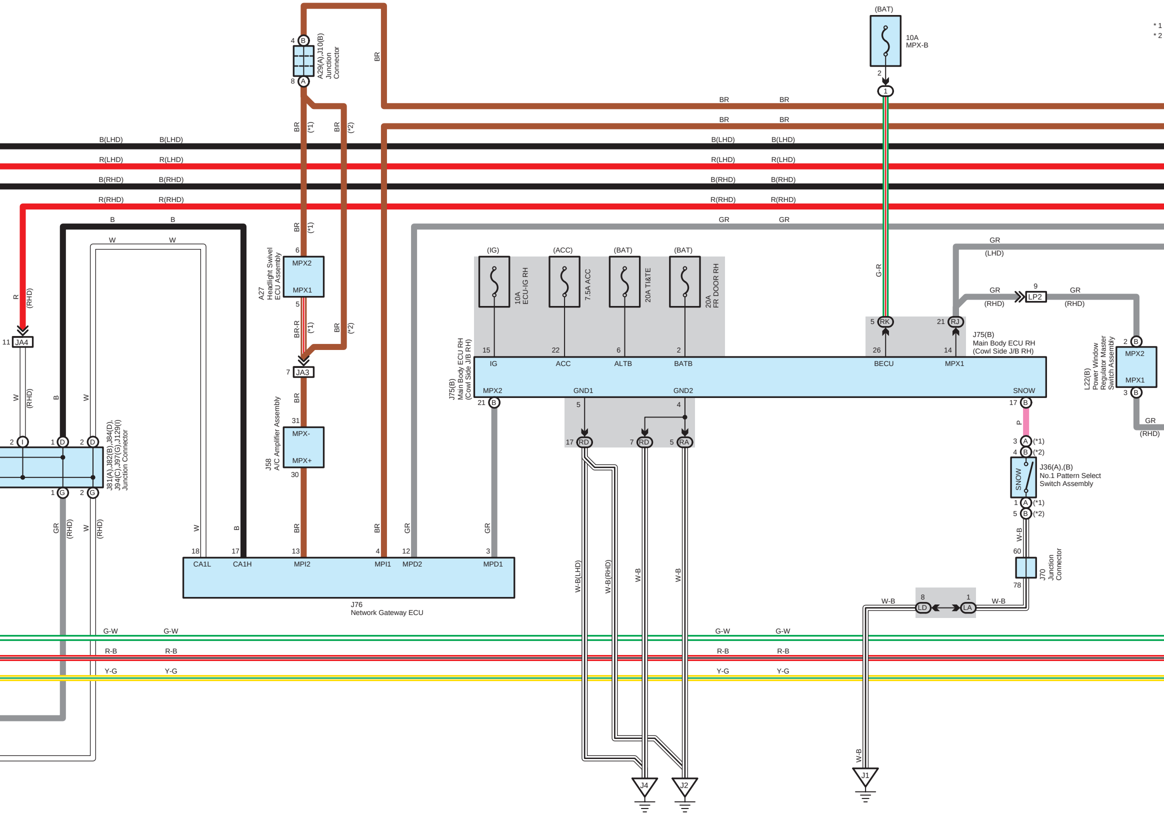

*1
*2
(BAT)
10A
MPX-B
2
1
A29(A),J10(B)
Junction
Connector
4
B
8
A
BR
BR
BR
BR
BR
B(LHD)
B(LHD)
B(LHD)
B(LHD)
R(LHD)
R(LHD)
R(LHD)
R(LHD)
B(RHD)
B(RHD)
B(RHD)
B(RHD)
R(RHD)
R(RHD)
R(RHD)
R(RHD)
B
B
W
W
GR
GR
GR
(LHD)
G-R
(*1)
(*2)
A27
Headlight Swivel
ECU Assembly
6
MPX2
MPX1
5
BR-R
7
JA3
J58
A/C Amplifier Assembly
31
MPX-
MPX+
30
(IG)
(ACC)
(BAT)
(BAT)
10A
ECU-IG RH
7.5A ACC
20A TI&TE
20A
FR DOOR RH
J75(B)
Main Body ECU RH
(Cowl Side J/B RH)
15
IG
22
ACC
6
ALTB
2
BATB
26
BECU
14
MPX1
5
RK
21
RJ
MPX2
GND1
GND2
SNOW
21
B
5
4
17
RD
7
RD
5
RA
17
B
P
GR
(RHD)
9
LP2
L22(B)
Power Window
Regulator Master
Switch Assembly
2
B
MPX2
MPX1
3
B
3
A
(*1)
4
B
(*2)
J36(A),(B)
No.1 Pattern Select
Switch Assembly
SNOW
1
A
(*1)
5
B
(*2)
W-B
60
J70
Junction
Connector
78
W-B
W-B
8
LD
1
LA
R
(RHD)
11
JA4
W
(RHD)
B
W
2
I
1
D
2
D
J81(A),J82(B),J84(D),
J94(C),J97(G),J129(I)
Junction Connector
1
G
2
G
GR
(RHD)
W
(RHD)
W
B
BR
BR
GR
GR
18
CA1L
17
CA1H
13
MPI2
4
MPI1
12
MPD2
3
MPD1
J76
Network Gateway ECU
W-B(LHD)
W-B(RHD)
W-B
W-B
G-W
G-W
G-W
G-W
R-B
R-B
R-B
R-B
Y-G
Y-G
Y-G
Y-G
J4
J2
W-B
J1

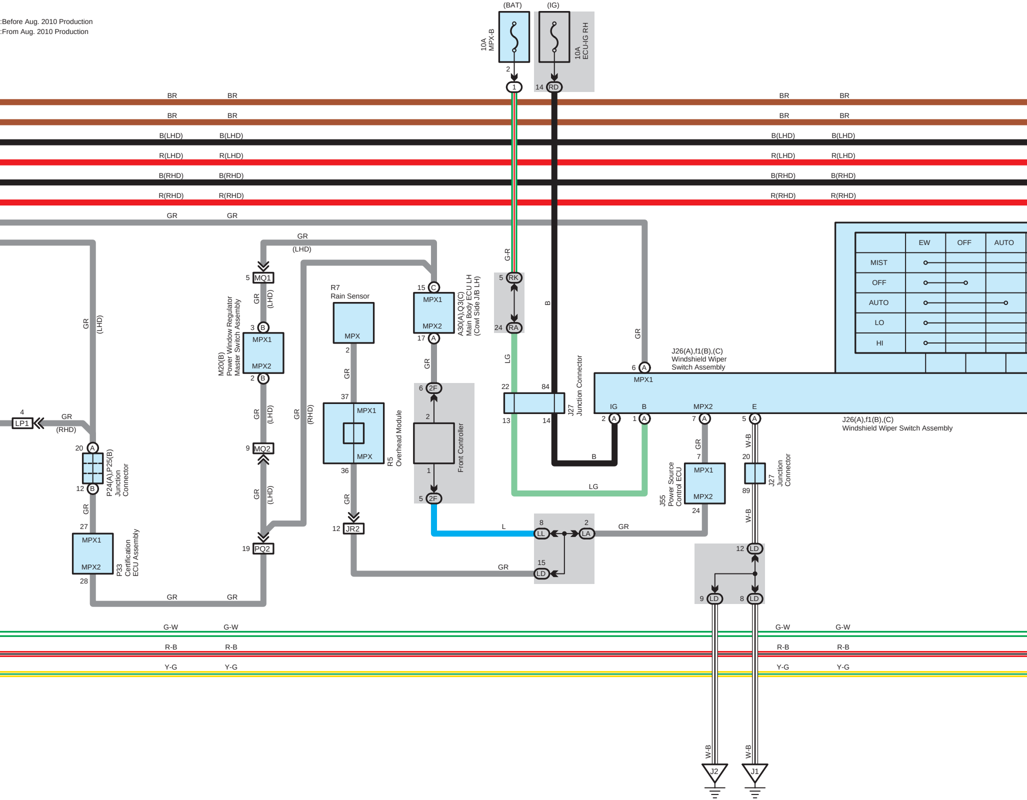
:Before Aug. 2010 Production
:From Aug. 2010 Production
(BAT)
(IG)
10A
MPX-B
10A
ECU-IG RH
2
1
14
RD
BR
BR
B(LHD)
R(LHD)
B(RHD)
R(RHD)
GR
G-R
B
5
RK
24
RA
LG
22
84
13
14
J27
Junction Connector
B
LG
GR
(LHD)
5
MQ1
GR
(LHD)
3
B
MPX1
MPX2
2
B
M20(B)
Power Window Regulator
Master Switch Assembly
GR
(LHD)
9
MQ2
GR
(LHD)
19
PQ2
GR
(RHD)
R7
Rain Sensor
MPX
2
GR
37
MPX1
MPX
36
R5
Overhead Module
GR
12
JR2
GR
15
C
MPX1
MPX2
17
A
A30(A),Q3(C)
Main Body ECU LH
(Cowl Side J/B LH)
GR
6
2F
2
1
Front Controller
5
2F
L
8
LL
2
LA
GR
15
LD
GR
(LHD)
4
LP1
GR
(RHD)
20
A
12
B
P24(A),P25(B)
Junction
Connector
GR
27
MPX1
MPX2
28
P33
Certification
ECU Assembly
GR
GR
6
A
J26(A),f1(B),(C)
Windshield Wiper
Switch Assembly
MPX1
IG
B
MPX2
E
2
A
1
A
7
A
5
A
J26(A),f1(B),(C)
Windshield Wiper Switch Assembly
EW
OFF
AUTO
MIST
OFF
AUTO
LO
HI
GR
7
MPX1
MPX2
24
J55
Power Source
Control ECU
W-B
20
89
J27
Junction
Connector
W-B
12
LD
9
LD
8
LD
W-B
W-B
J2
J1
G-W
G-W
R-B
R-B
Y-G
Y-G

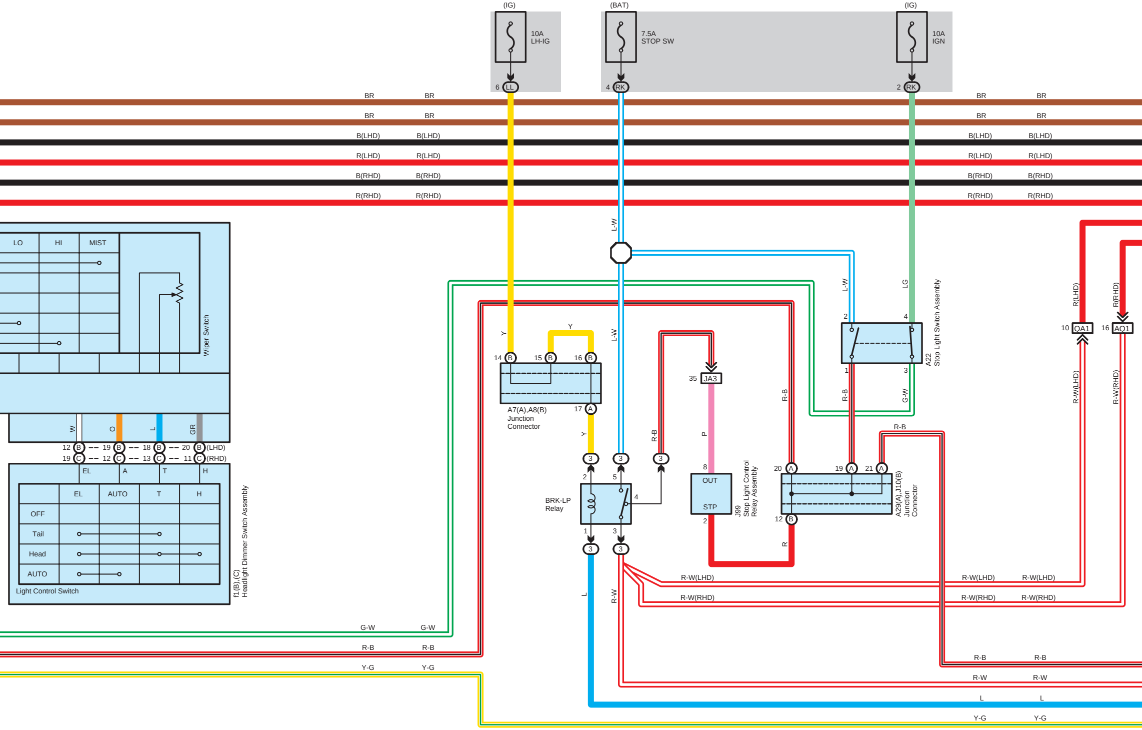
(IG)
10A
LH-IG
6
LL
(BAT)
7.5A
STOP SW
4
RK
(IG)
10A
IGN
2
RK
BR
BR
B(LHD)
R(LHD)
B(RHD)
R(RHD)
LO
HI
MIST
Wiper Switch
W
O
L
GR
12 B 19 B 18 B 20 B (LHD)
19 C 12 C 13 C 11 C (RHD)
EL
A
T
H
EL
AUTO
T
H
OFF
Tail
Head
AUTO
Light Control Switch
f1(B),(C)
Headlight Dimmer Switch Assembly
Y
L-W
LG
Y
14 B
15 B
16 B
A7(A),A8(B)
Junction
Connector
17 A
BRK-LP
Relay
2
5
4
1
3
3
R-B
35
JA3
P
8
OUT
STP
2
J99
Stop Light Control
Relay Assembly
20 A
19 A
21 A
12 B
R
A29(A),J10(B)
Junction
Connector
2
4
1
3
A22
Stop Light Switch Assembly
G-W
R-B
R(LHD)
R(RHD)
10
QA1
16
AQ1
R-W(LHD)
R-W(RHD)
L
R-W
G-W
R-B
Y-G

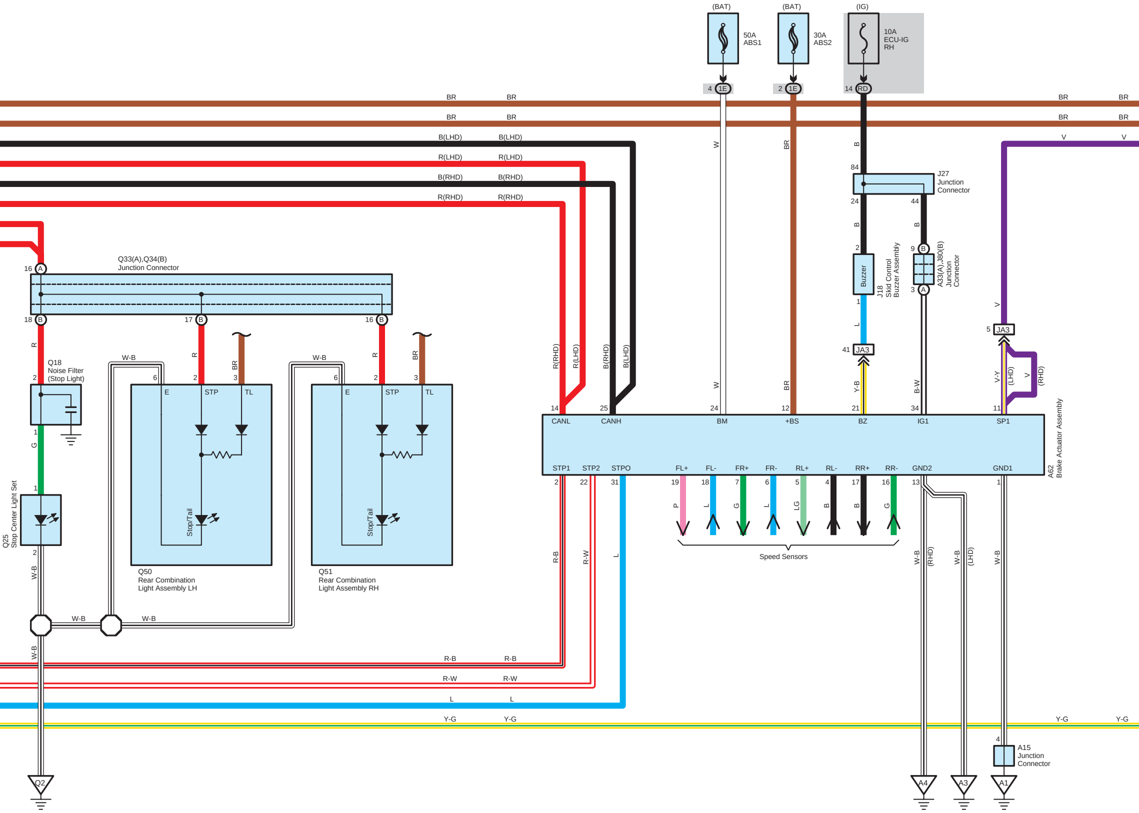
(BAT)
50A
ABS1
(BAT)
30A
ABS2
(IG)
10A
ECU-IG
RH
4
1E
2
1E
14
RD
BR
BR
B(LHD)
R(LHD)
B(RHD)
R(RHD)
V
W
B
84
J27
Junction
Connector
24
44
2
9
B
Buzzer
J18
Skid Control
Buzzer Assembly
A33(A),J80(B)
Junction
Connector
3
A
1
L
41
JA3
Y-B
B-W
5
JA3
V-Y
(LHD)
(RHD)
Q33(A),Q34(B)
Junction Connector
16
A
18
B
17
16
R
BR
Q18
Noise Filter
(Stop Light)
W-B
6
E
STP
TL
3
Stop/Tail
Q50
Rear Combination
Light Assembly LH
Q51
Rear Combination
Light Assembly RH
G
Q25
Stop Center Light Set
Q2
14
25
24
12
21
34
11
CANL
CANH
BM
+BS
BZ
IG1
SP1
STP1
STP2
STPO
FL+
FL-
FR+
FR-
RL+
RL-
RR+
RR-
GND2
GND1
A62
Brake Actuator Assembly
22
31
19
18
7
6
5
4
17
16
13
P
LG
Speed Sensors
R-B
R-W
Y-G
A15
Junction
Connector
A4
A3
A1

* 1 :Before Aug. 2010 Production
* 2 :From Aug. 2010 Production

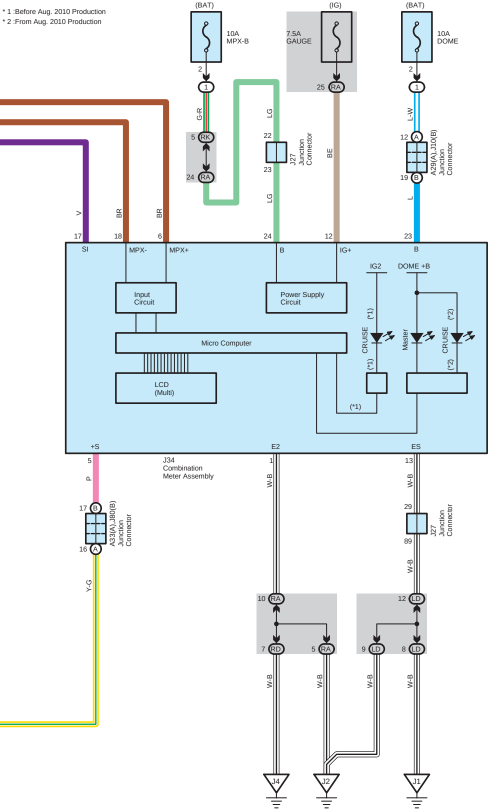
(BAT)
10A
MPX-B
2
1
G-R
5
RK
24
RA
(IG)
7.5A
GAUGE
25
RA
LG
22
23
J27
Junction
Connector
LG
BE
(BAT)
10A
DOME
2
1
L-W
12
A
A29(A),J10(B)
Junction
Connector
19
B
L
V
BR
BR
17
18
6
24
12
23
SI
MPX-
MPX+
B
IG+
B
Input
Circuit
Power Supply
Circuit
IG2
DOME +B
(*1)
CRUISE
Master
CRUISE
(*2)
Micro Computer
(*1)
(*2)
LCD
(Multi)
(*1)
+S
E2
ES
5
P
J34
Combination
Meter Assembly
1
W-B
13
W-B
29
J27
Junction
Connector
89
W-B
17
B
A33(A),J80(B)
Junction
Connector
16
A
Y-G
10
RA
12
LD
7
RD
5
RA
9
LD
8
LD
W-B
W-B
W-B
W-B
J4
J2
J1