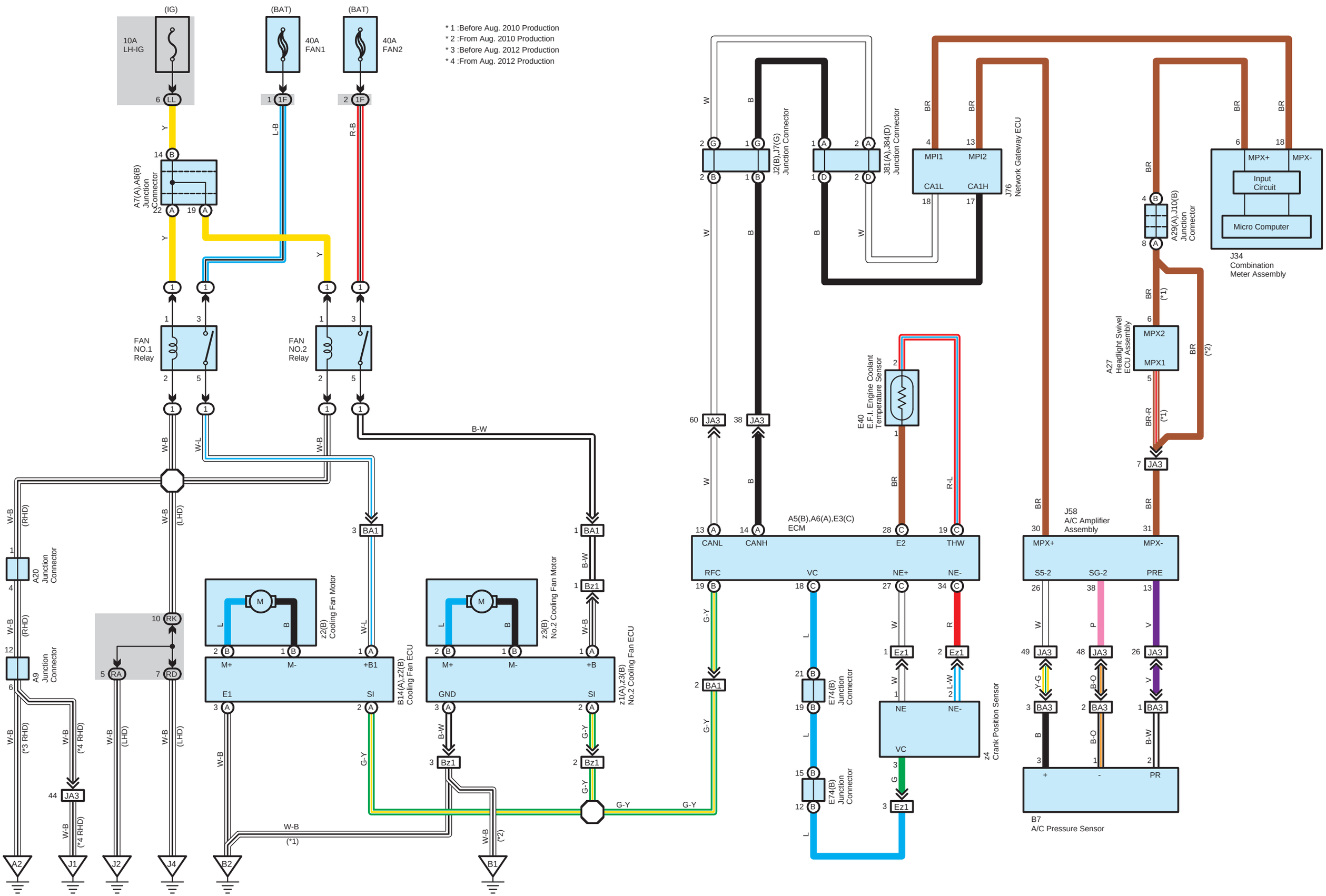
* 1 :Before Aug. 2010 Production
* 2 :From Aug. 2010 Production
* 3 :Before Aug. 2012 Production
* 4 :From Aug. 2012 Production
(IG)
10A
LH-IG
(BAT)
40A
FAN1
(BAT)
40A
FAN2
A7(A),A8(B)
Junction
Connector
FAN
NO.1
Relay
FAN
NO.2
Relay
A20
Junction
Connector
A9
Junction
Connector
z2(B)
Cooling Fan Motor
z3(B)
No.2 Cooling Fan Motor
B14(A),z2(B)
Cooling Fan ECU
z1(A),z3(B)
No.2 Cooling Fan ECU
J2(B),J7(G)
Junction Connector
J81(A),J84(D)
Junction Connector
J76
Network Gateway ECU
A29(A),J10(B)
Junction
Connector
J34
Combination
Meter Assembly
Input
Circuit
Micro Computer
A27
Headlight Swivel
ECU Assembly
E40
E.F.I. Engine Coolant
Temperature Sensor
A5(B),A6(A),E3(C)
ECM
E74(B)
Junction
Connector
z4
Crank Position Sensor
J58
A/C Amplifier
Assembly
B7
A/C Pressure Sensor