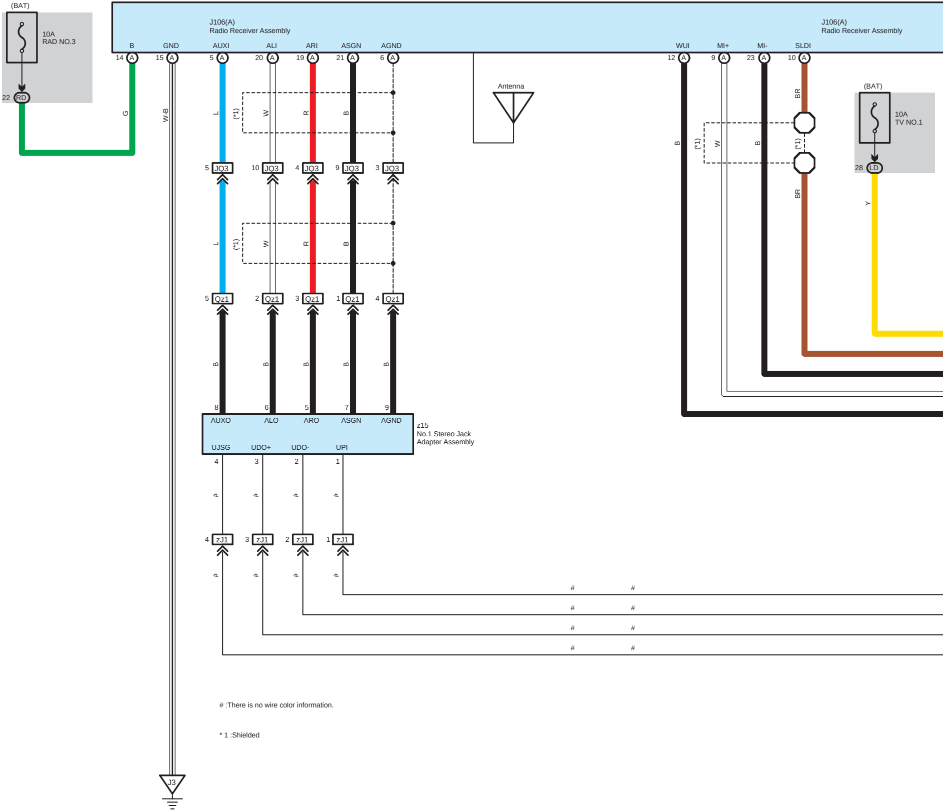
(BAT)
10A
RAD NO.3
22 RD
J106(A)
Radio Receiver Assembly
B
GND
AUXI
ALI
ARI
ASGN
AGND
14 A
15 A
5 A
20 A
19 A
21 A
6 A
G
W-B
L
(*1)
W
R
B
Antenna
5 JQ3
10 JQ3
4 JQ3
9 JQ3
3 JQ3
5 Qz1
2 Qz1
3 Qz1
1 Qz1
4 Qz1
8
6
5
7
9
AUXO
ALO
ARO
ASGN
AGND
z15
No.1 Stereo Jack
Adapter Assembly
UJSG
UDO+
UDO-
UPI
4
3
2
1
#
4 zJ1
3 zJ1
2 zJ1
1 zJ1
J3
J106(A)
Radio Receiver Assembly
WUI
MI+
MI-
SLDI
12 A
9 A
23 A
10 A
BR
(BAT)
10A
TV NO.1
28 LD
Y

:There is no wire color information.

* 1 :Shielded

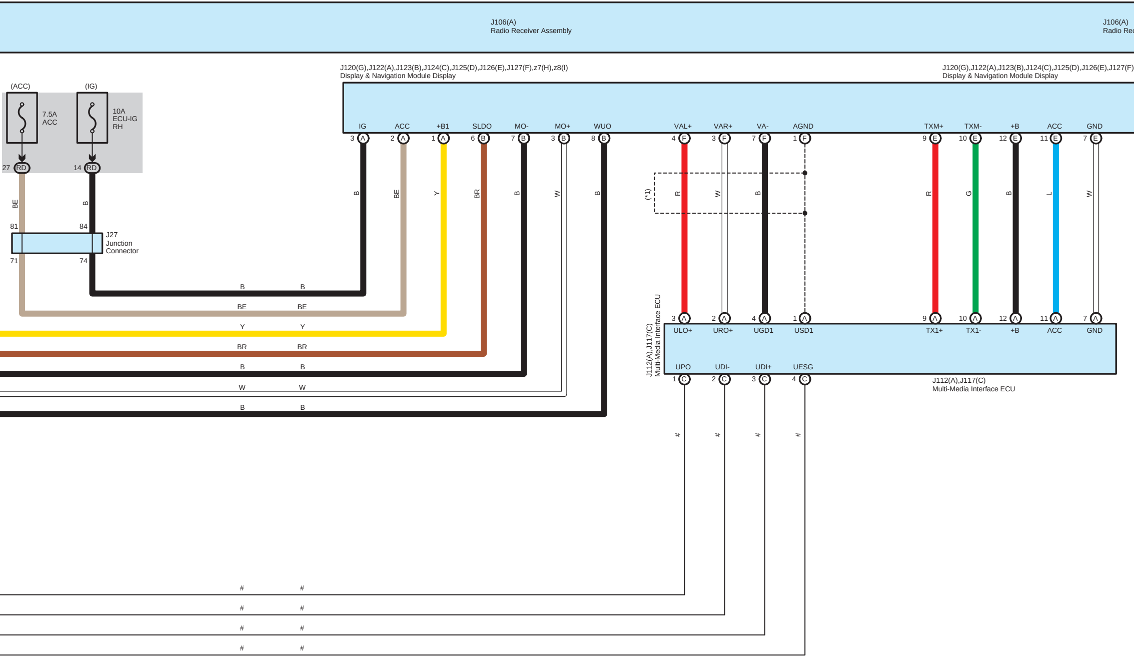
J106(A)
Radio Receiver Assembly
J106(A)
Radio Rec
J120(G),J122(A),J123(B),J124(C),J125(D),J126(E),J127(F),z7(H),z8(I)
Display & Navigation Module Display
J120(G),J122(A),J123(B),J124(C),J125(D),J126(E),J127(F)
Display & Navigation Module Display
(ACC)
(IG)
7.5A
ACC
10A
ECU-IG
RH
27 RD
14 RD
BE
B
81
84
71
74
J27
Junction
Connector
IG
ACC
+B1
SLDO
MO-
MO+
WUO
VAL+
VAR+
VA-
AGND
TXM+
TXM-
+B
ACC
GND
3 A
2 A
1 A
6 B
7 B
3 B
8 B
4 F
3 F
7 F
1 F
9 E
10 E
12 E
11 E
7 E
B
BE
Y
BR
B
W
B
(*1)
R
W
B
R
G
B
L
W
B
BE
Y
BR
B
W
B
3 A
2 A
4 A
1 A
9 A
10 A
12 A
11 A
7 A
ULO+
URO+
UGD1
USD1
TX1+
TX1-
+B
ACC
GND
UPO
UDI-
UDI+
UESG
1 C
2 C
3 C
4 C
J112(A),J117(C)
Multi-Media Interface ECU
J112(A),J117(C)
Multi-Media Interface ECU
#
#

:There is no wire color information.

* 1 :Shielded

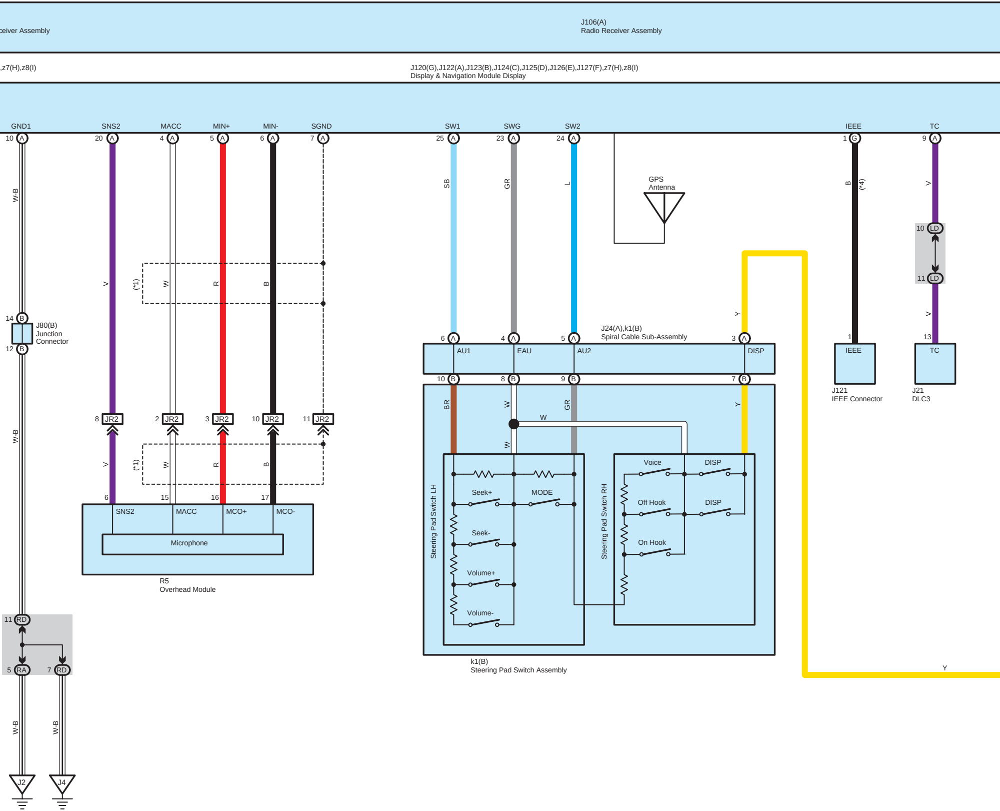
ceiver Assembly
J106(A)
Radio Receiver Assembly
,z7(H),z8(I)
J120(G),J122(A),J123(B),J124(C),J125(D),J126(E),J127(F),z7(H),z8(I)
Display & Navigation Module Display
GND1
SNS2
MACC
MIN+
MIN-
SGND
SW1
SWG
SW2
IEEE
TC
10 A
20 A
4 A
5 A
6 A
7 A
25 A
23 A
24 A
1 G
9 A
W-B
V
(*1)
W
R
B
SB
GR
L
GPS Antenna
B
(*4)
V
10 LD
11 LD
Y
14 B
J80(B)
Junction Connector
12 B
6 A
4 A
5 A
J24(A),k1(B)
Spiral Cable Sub-Assembly
3 A
1
13
AU1
EAU
AU2
DISP
IEEE
TC
10 B
8 B
9 B
7 B
J121
IEEE Connector
J21
DLC3
8 JR2
2 JR2
3 JR2
10 JR2
11 JR2
BR
W
GR
Y
W
Steering Pad Switch LH
Seek+
MODE
Seek-
Volume+
Volume-
Steering Pad Switch RH
Voice
DISP
Off Hook
DISP
On Hook
6
15
16
17
SNS2
MACC
MCO+
MCO-
Microphone
R5
Overhead Module
k1(B)
Steering Pad Switch Assembly
11 RD
5 RA
7 RD
J2
J4
Y

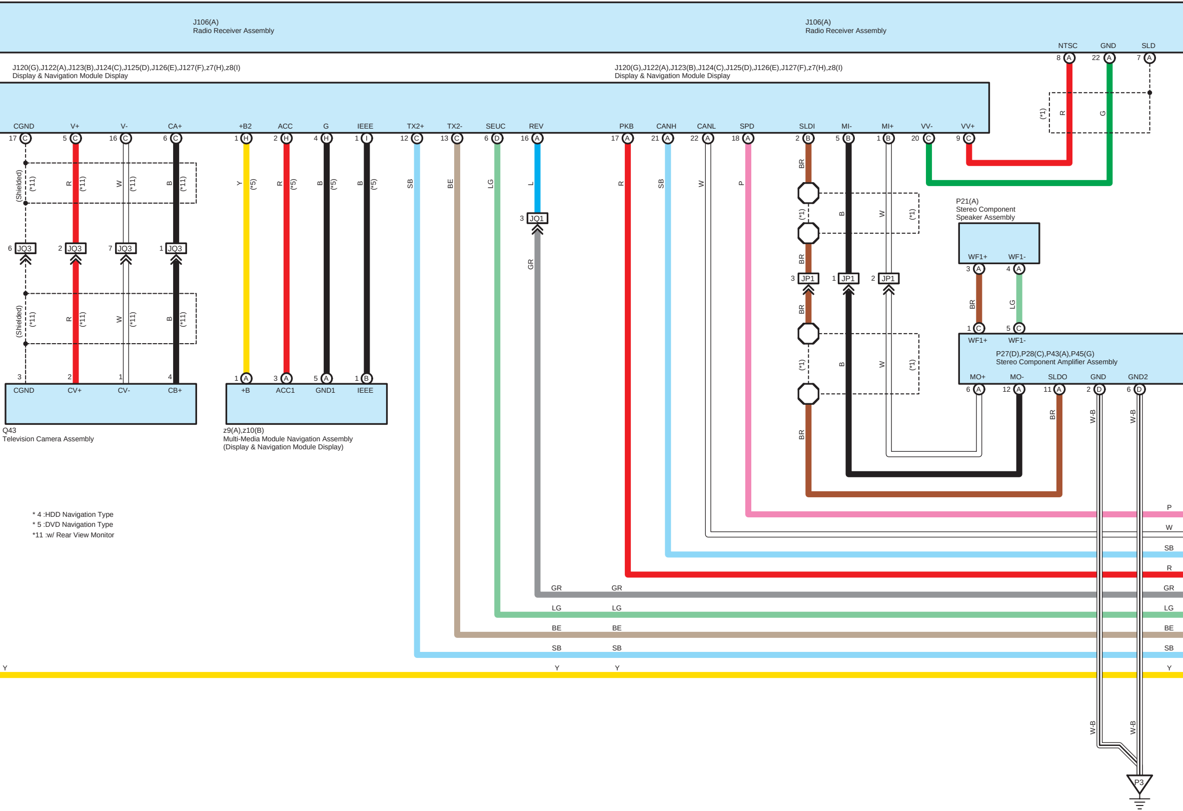
J106(A)
Radio Receiver Assembly
J106(A)
Radio Receiver Assembly
NTSC
GND
SLD
8 A
22 A
7 A
J120(G),J122(A),J123(B),J124(C),J125(D),J126(E),J127(F),z7(H),z8(I)
Display & Navigation Module Display
J120(G),J122(A),J123(B),J124(C),J125(D),J126(E),J127(F),z7(H),z8(I)
Display & Navigation Module Display
CGND
V+
V-
CA+
+B2
ACC
G
IEEE
TX2+
TX2-
SEUC
REV
PKB
CANH
CANL
SPD
SLDI
MI-
MI+
VV-
VV+
17 C
5 C
16 C
6 C
1 H
2 H
4 H
1 I
12 C
13 C
6 D
16 A
17 A
21 A
22 A
18 A
2 B
5 B
1 B
20 C
9 C
(Shielded)
(*11)
R
W
B
Y
(*5)
SB
BE
LG
L
P
BR
(*1)
G
3 JQ1
GR
6 JQ3
2 JQ3
7 JQ3
1 JQ3
3 JP1
1 JP1
2 JP1
P21(A)
Stereo Component
Speaker Assembly
WF1+
WF1-
3 A
4 A
1 C
5 C
P27(D),P28(C),P43(A),P45(G)
Stereo Component Amplifier Assembly
MO+
MO-
SLDO
GND
GND2
6 A
12 A
11 A
2 D
6 D
W-B
3
2
1
4
CGND
CV+
CV-
CB+
Q43
Television Camera Assembly
1 A
3 A
5 A
1 B
+B
ACC1
GND1
IEEE
z9(A),z10(B)
Multi-Media Module Navigation Assembly
(Display & Navigation Module Display)
P3

* 4 :HDD Navigation Type
* 5 :DVD Navigation Type
*11 :w/ Rear View Monitor

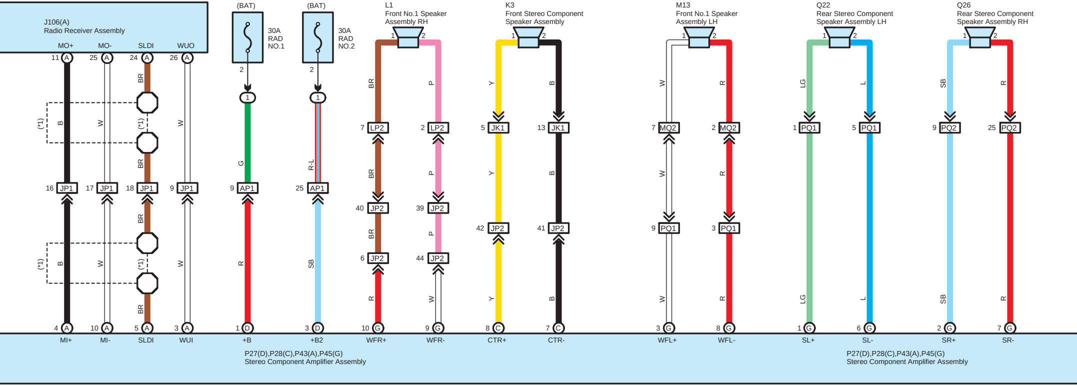
J106(A)
Radio Receiver Assembly
MO+
MO-
SLDI
WUO
11 A
25 A
24 A
26 A
(BAT)
30A RAD NO.1
(BAT)
30A RAD NO.2
L1
Front No.1 Speaker Assembly RH
K3
Front Stereo Component Speaker Assembly
M13
Front No.1 Speaker Assembly LH
Q22
Rear Stereo Component Speaker Assembly LH
Q26
Rear Stereo Component Speaker Assembly RH
(*1)
B
W
BR
16 JP1
17 JP1
18 JP1
9 JP1
G
R-L
9 AP1
25 AP1
R
SB
7 LP2
2 LP2
40 JP2
39 JP2
6 JP2
44 JP2
P
Y
5 JK1
13 JK1
42 JP2
41 JP2
7 MQ2
2 MQ2
9 PQ1
3 PQ1
1 PQ1
5 PQ1
9 PQ2
25 PQ2
LG
L
4 A
10 A
5 A
3 A
1 D
3 D
10 G
9 G
8 C
7 C
3 G
8 G
1 G
6 G
2 G
7 G
MI+
MI-
SLDI
WUI
+B
+B2
WFR+
WFR-
CTR+
CTR-
WFL+
WFL-
SL+
SL-
SR+
SR-
P27(D),P28(C),P43(A),P45(G)
Stereo Component Amplifier Assembly
P27(D),P28(C),P43(A),P45(G)
Stereo Component Amplifier Assembly

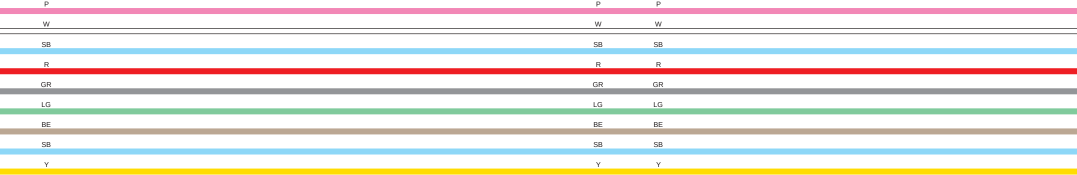
P
W
SB
R
GR
LG
BE
SB
Y

* 1 :Shielded

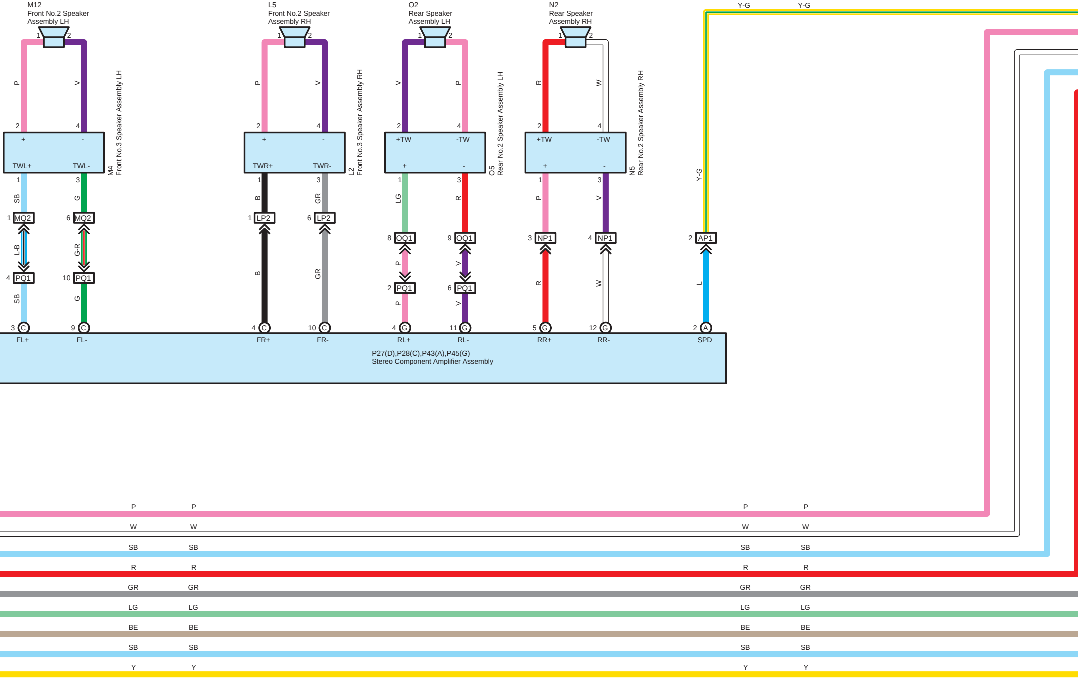
M12
Front No.2 Speaker
Assembly LH
L5
Front No.2 Speaker
Assembly RH
O2
Rear Speaker
Assembly LH
N2
Rear Speaker
Assembly RH
Y-G
Y-G
M4
Front No.3 Speaker Assembly LH
L2
Front No.3 Speaker Assembly RH
O5
Rear No.2 Speaker Assembly LH
N5
Rear No.2 Speaker Assembly RH
TWL+
TWL-
TWR+
TWR-
+TW
-TW
+
-
MQ2
PQ1
LP2
OQ1
NP1
AP1
L-B
G-R
SB
G
B
GR
LG
R
P
V
W
L
Y-G
FL+
FL-
FR+
FR-
RL+
RL-
RR+
RR-
SPD
P27(D),P28(C),P43(A),P45(G)
Stereo Component Amplifier Assembly
P
W
SB
R
GR
LG
BE
SB
Y

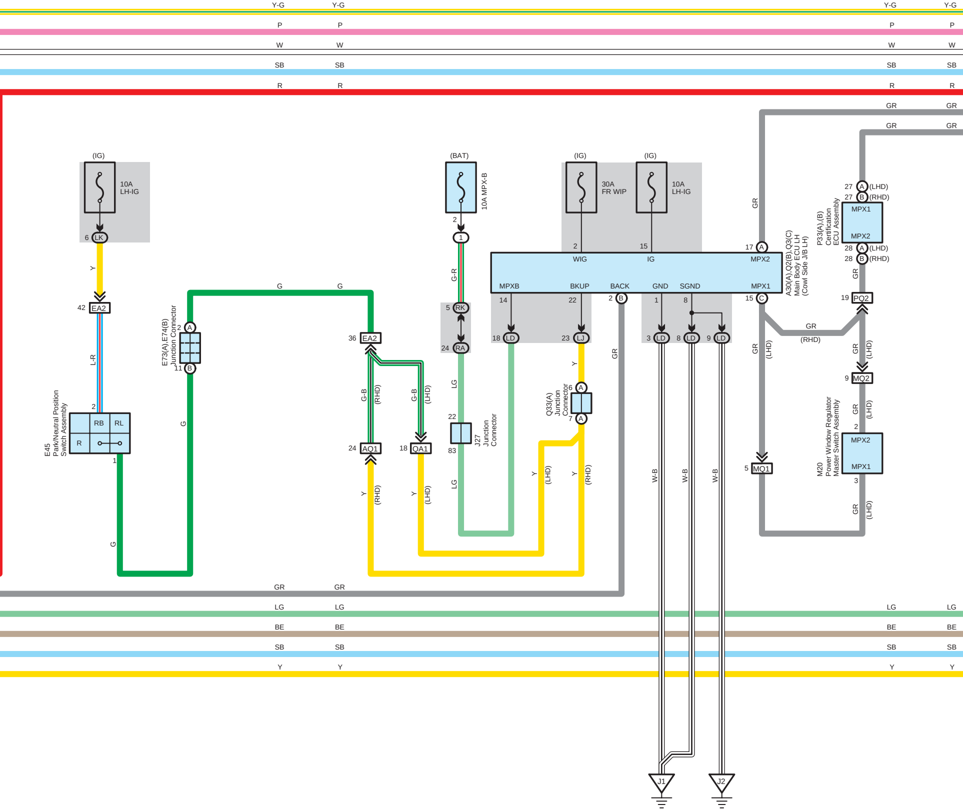
Y-G
P
W
SB
R
GR
(IG)
10A
LH-IG
6 LK
Y
42 EA2
L-R
2
RB
RL
R
1
E45
Park/Neutral Position
Switch Assembly
G
E73(A), E74(B)
Junction Connector
2 A
11 B
36 EA2
G-B
(RHD)
(LHD)
24 AQ1
18 QA1
(BAT)
10A MPX-B
2
1
G-R
5 RK
24 RA
LG
22
83
J27
Junction
Connector
30A
FR WIP
15
WIG
IG
MPX2
MPXB
BKUP
BACK
GND
SGND
MPX1
14
22
2 B
1
8
17 A
15 C
18 LD
23 LJ
3 LD
8 LD
9 LD
Q33(A)
Junction
Connector
6 A
7 A
W-B
A30(A), Q2(B), Q3(C)
Main Body ECU LH
(Cowl Side J/B LH)
27 A (LHD)
27 B (RHD)
28 A (LHD)
28 B (RHD)
P33(A), (B)
Certification
ECU Assembly
19 PQ2
9 MQ2
5 MQ1
M20
Power Window Regulator
Master Switch Assembly
3
BE
J1
J2

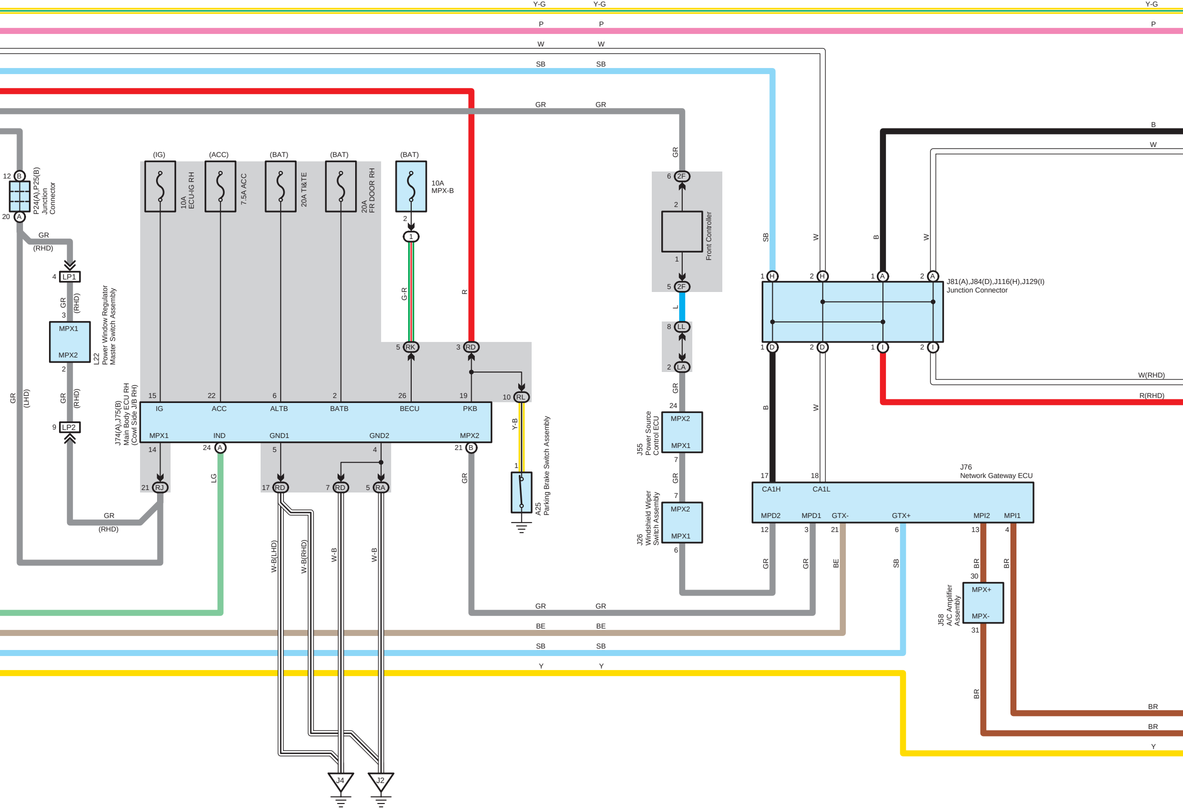
Y-G
P
W
SB
GR
B
W
P24(A),P25(B)
Junction
Connector
12 B
20 A
GR
(RHD)
4 LP1
GR
(RHD)
3
MPX1
MPX2
2
L22
Power Window Regulator
Master Switch Assembly
GR
(RHD)
9 LP2
GR
(LHD)
GR
(RHD)
(IG)
(ACC)
(BAT)
(BAT)
(BAT)
10A
ECU-IG RH
7.5A ACC
20A TI&TE
20A
FR DOOR RH
10A
MPX-B
2
1
G-R
R
5 RK
3 RD
10 RL
15
22
6
2
26
19
IG
ACC
ALTB
BATB
BECU
PKB
MPX1
IND
GND1
GND2
MPX2
J74(A),J75(B)
Main Body ECU RH
(Cowl Side J/B RH)
14
24 A
5
4
21 B
21 RJ
17 RD
7 RD
5 RA
LG
W-B(LHD)
W-B(RHD)
W-B
W-B
J4
J2
Y-B
1
A25
Parking Brake Switch Assembly
GR
6 2F
2
Front Controller
1
5 2F
L
8 LL
2 LA
GR
24
MPX2
MPX1
J55
Power Source
Control ECU
7
GR
7
MPX2
MPX1
J26
Windshield Wiper
Switch Assembly
6
SB
W
B
W
1 H
2 H
1 A
2 A
J81(A),J84(D),J116(H),J129(I)
Junction Connector
1 D
2 D
1 I
2 I
W(RHD)
R(RHD)
B
W
17
18
J76
Network Gateway ECU
CA1H
CA1L
MPD2
MPD1
GTX-
GTX+
MPI2
MPI1
12
3
21
6
13
4
GR
GR
BE
SB
BR
BR
30
MPX+
MPX-
31
J58
A/C Amplifier
Assembly
BR
GR
BE
SB
Y
BR
BR
Y

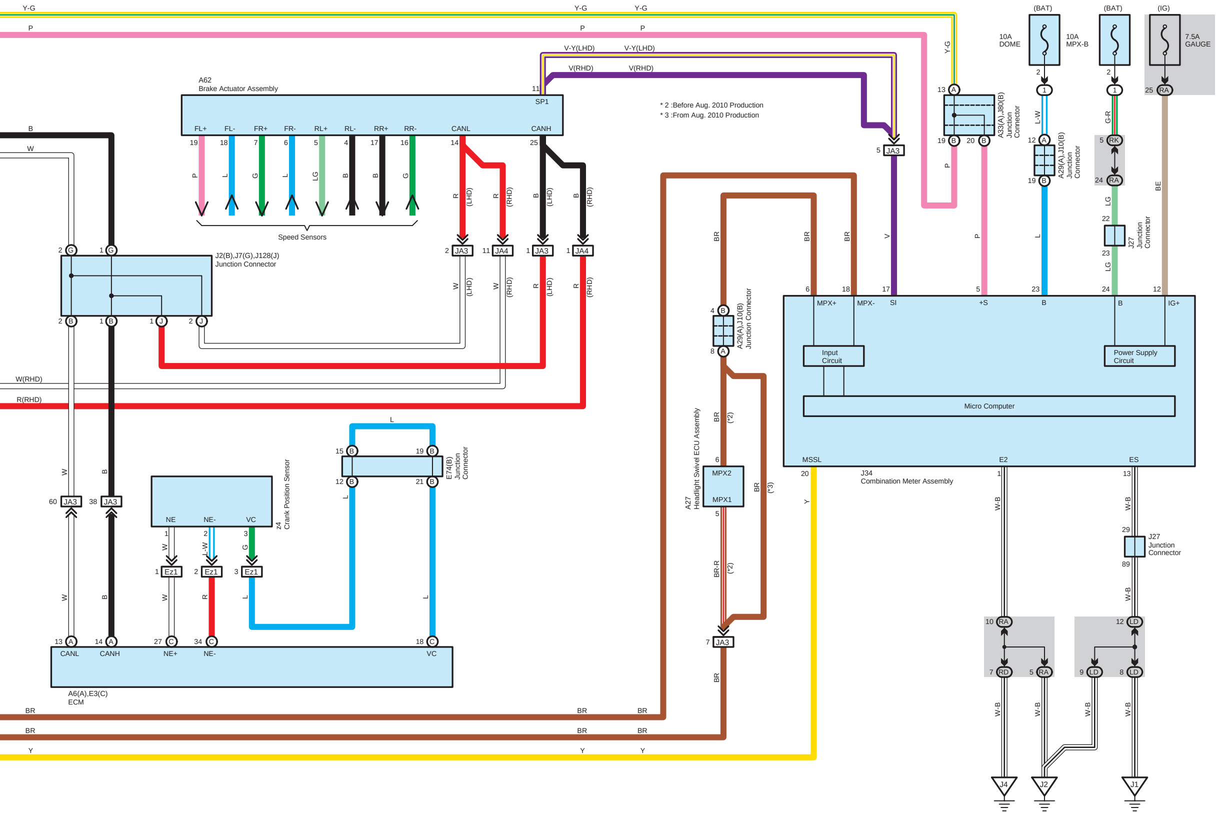

A62
Brake Actuator Assembly
SP1
FL+
FL-
FR+
FR-
RL+
RL-
RR+
RR-
CANL
CANH
Speed Sensors
J2(B),J7(G),J128(J)
Junction Connector
A33(A),J80(B)
Junction Connector
A29(A),J10(B)
Junction Connector
J27
Junction Connector
(BAT)
(IG)
10A
DOME
10A
MPX-B
7.5A
GAUGE
V-Y(LHD)
V(RHD)
W(RHD)
R(RHD)
E74(B)
Junction Connector
z4
Crank Position Sensor
NE
NE-
VC
A27
Headlight Swivel ECU Assembly
MPX2
MPX1
J34
Combination Meter Assembly
MPX+
MPX-
SI
+S
B
IG+
Input Circuit
Power Supply Circuit
Micro Computer
MSSL
E2
ES
A6(A),E3(C)
ECM
CANL
CANH
NE+
NE-
VC
JA3
JA4
Ez1
J1
J2
J4

* 2 :Before Aug. 2010 Production
* 3 :From Aug. 2010 Production