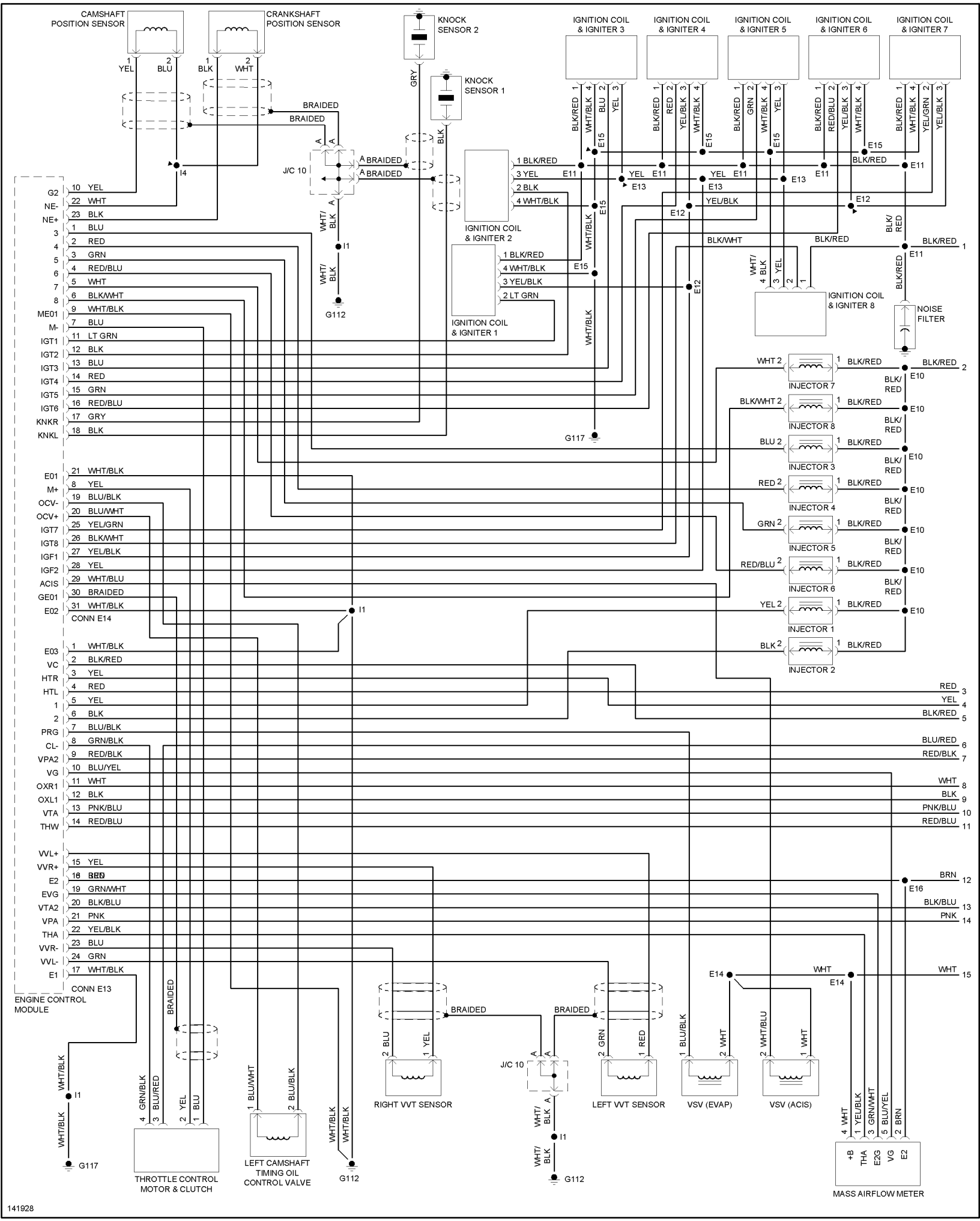
CAMSHAFT POSITION SENSOR
CRANKSHAFT POSITION SENSOR
KNOCK SENSOR 2
KNOCK SENSOR 1
IGNITION COIL & IGNITER 3
IGNITION COIL & IGNITER 4
IGNITION COIL & IGNITER 5
IGNITION COIL & IGNITER 6
IGNITION COIL & IGNITER 7
IGNITION COIL & IGNITER 2
IGNITION COIL & IGNITER 1
IGNITION COIL & IGNITER 8
NOISE FILTER
INJECTOR 7
INJECTOR 8
INJECTOR 3
INJECTOR 4
INJECTOR 5
INJECTOR 6
INJECTOR 1
INJECTOR 2
J/C 10
G112
G117
CONN E14
CONN E13
ENGINE CONTROL MODULE
THROTTLE CONTROL MOTOR & CLUTCH
LEFT CAMSHAFT TIMING OIL CONTROL VALVE
RIGHT VVT SENSOR
LEFT VVT SENSOR
VSV (EVAP)
VSV (ACIS)
MASS AIRFLOW METER
141928

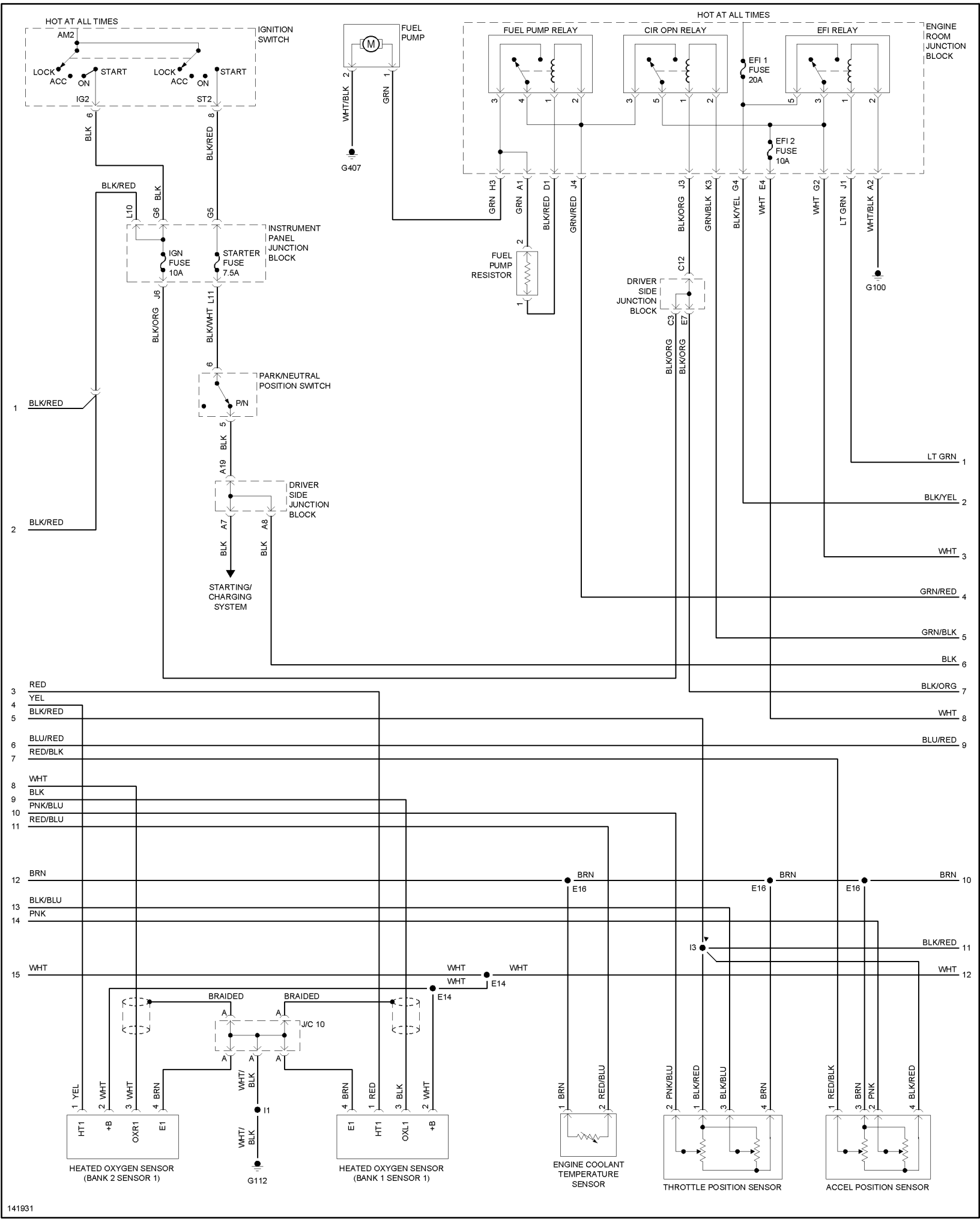
HOT AT ALL TIMES
AM2
IGNITION SWITCH
LOCK
ACC
ON
START
IG2
ST2
FUEL PUMP
WHT/BLK
GRN
G407
FUEL PUMP RELAY
CIR OPN RELAY
EFI RELAY
ENGINE ROOM JUNCTION BLOCK
EFI 1 FUSE 20A
EFI 2 FUSE 10A
BLK
BLK/RED
INSTRUMENT PANEL JUNCTION BLOCK
IGN FUSE 10A
STARTER FUSE 7.5A
FUEL PUMP RESISTOR
DRIVER SIDE JUNCTION BLOCK
BLK/ORG
BLK/WHT
PARK/NEUTRAL POSITION SWITCH
P/N
BLK/YEL
WHT
LT GRN
WHT/BLK
G100
GRN/RED
GRN/BLK
STARTING/ CHARGING SYSTEM
RED
YEL
BLU/RED
RED/BLK
PNK/BLU
RED/BLU
BRN
BLK/BLU
PNK
E16
I3
E14
BRAIDED
J/C 10
I1
G112
HEATED OXYGEN SENSOR (BANK 2 SENSOR 1)
HEATED OXYGEN SENSOR (BANK 1 SENSOR 1)
ENGINE COOLANT TEMPERATURE SENSOR
THROTTLE POSITION SENSOR
ACCEL POSITION SENSOR
HT1
+B
OXR1
E1
OXL1
141931

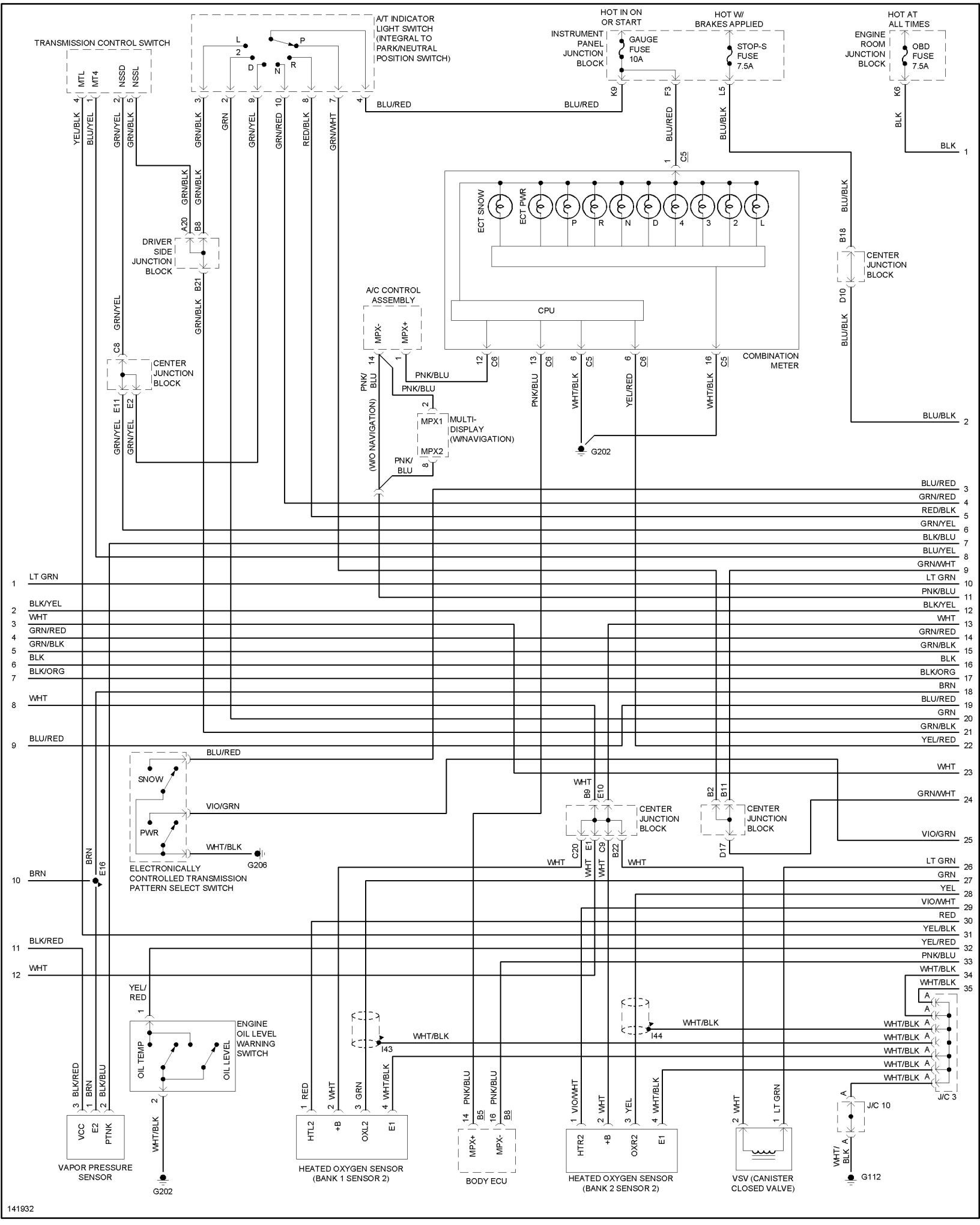
TRANSMISSION CONTROL SWITCH
A/T INDICATOR LIGHT SWITCH (INTEGRAL TO PARK/NEUTRAL POSITION SWITCH)
HOT IN ON OR START
INSTRUMENT PANEL JUNCTION BLOCK
GAUGE FUSE 10A
HOT W/ BRAKES APPLIED
STOP-S FUSE 7.5A
HOT AT ALL TIMES
ENGINE ROOM JUNCTION BLOCK
OBD FUSE 7.5A
DRIVER SIDE JUNCTION BLOCK
CENTER JUNCTION BLOCK
A/C CONTROL ASSEMBLY
CPU
COMBINATION METER
MULTI-DISPLAY (W/NAVIGATION)
(W/O NAVIGATION)
G202
SNOW
PWR
ELECTRONICALLY CONTROLLED TRANSMISSION PATTERN SELECT SWITCH
G206
ENGINE OIL LEVEL WARNING SWITCH
OIL TEMP
OIL LEVEL
VAPOR PRESSURE SENSOR
HEATED OXYGEN SENSOR (BANK 1 SENSOR 2)
BODY ECU
HEATED OXYGEN SENSOR (BANK 2 SENSOR 2)
VSV (CANISTER CLOSED VALVE)
J/C 10
J/C 3
G112
141932

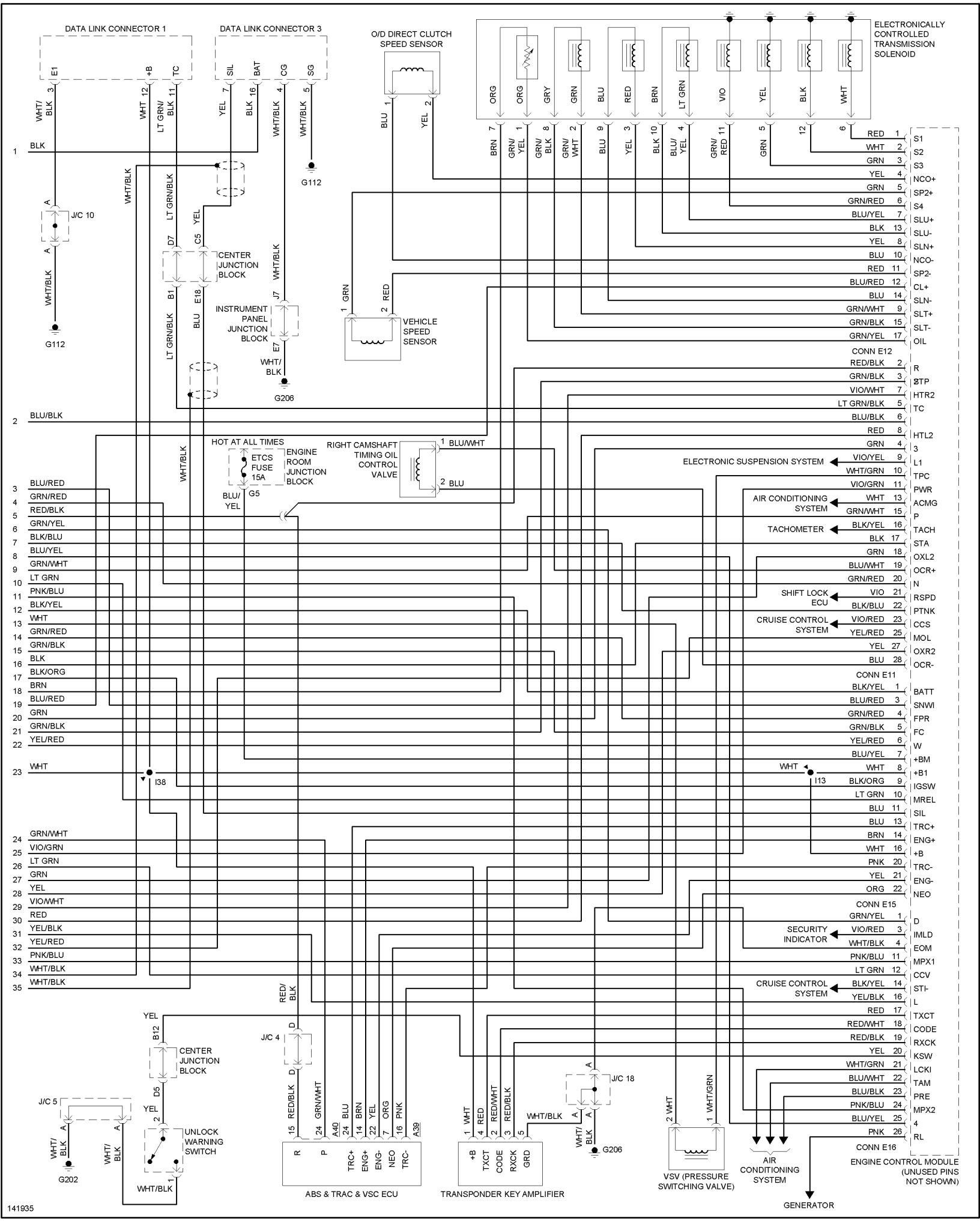
DATA LINK CONNECTOR 1
DATA LINK CONNECTOR 3
O/D DIRECT CLUTCH SPEED SENSOR
ELECTRONICALLY CONTROLLED TRANSMISSION SOLENOID
CENTER JUNCTION BLOCK
INSTRUMENT PANEL JUNCTION BLOCK
VEHICLE SPEED SENSOR
HOT AT ALL TIMES
ETCS FUSE 15A
ENGINE ROOM JUNCTION BLOCK
RIGHT CAMSHAFT TIMING OIL CONTROL VALVE
ELECTRONIC SUSPENSION SYSTEM
AIR CONDITIONING SYSTEM
TACHOMETER
SHIFT LOCK ECU
CRUISE CONTROL SYSTEM
SECURITY INDICATOR
CONN E12
CONN E11
CONN E15
CONN E16
ENGINE CONTROL MODULE (UNUSED PINS NOT SHOWN)
UNLOCK WARNING SWITCH
ABS & TRAC & VSC ECU
TRANSPONDER KEY AMPLIFIER
VSV (PRESSURE SWITCHING VALVE)
AIR CONDITIONING SYSTEM
GENERATOR
141935